Cambridge International AS & A Level

Cambridge Assessment International Education
Cambridge International Advanced Subsidiary and Advanced Level

CHEMISTRY **9701/51**

Paper 5 Planning, Analysis and Evaluation **May/June 2019**

MARK SCHEME

Maximum Mark: 30

Published

This mark scheme is published as an aid to teachers and candidates, to indicate the requirements of the examination. It shows the basis on which Examiners were instructed to award marks. It does not indicate the details of the discussions that took place at an Examiners' meeting before marking began, which would have considered the acceptability of alternative answers.

Mark schemes should be read in conjunction with the question paper and the Principal Examiner Report for Teachers.

Cambridge International will not enter into discussions about these mark schemes.

Cambridge International is publishing the mark schemes for the May/June 2019 series for most Cambridge IGCSE™, Cambridge International A and AS Level and Cambridge Pre-U components, and some Cambridge O Level components.

© UCLES 2019

PUBLISHED

Generic Marking Principles

These general marking principles must be applied by all examiners when marking candidate answers. They should be applied alongside the specific content of the mark scheme or generic level descriptors for a question. Each question paper and mark scheme will also comply with these marking principles.

GENERIC MARKING PRINCIPLE 1:

Marks must be awarded in line with:

- the specific content of the mark scheme or the generic level descriptors for the question
- the specific skills defined in the mark scheme or in the generic level descriptors for the question
- the standard of response required by a candidate as exemplified by the standardisation scripts.

GENERIC MARKING PRINCIPLE 2:

Marks awarded are always **whole marks** (not half marks, or other fractions).

GENERIC MARKING PRINCIPLE 3:

Marks must be awarded **positively**:

- marks are awarded for correct/valid answers, as defined in the mark scheme. However, credit is given for valid answers which go beyond the scope of the syllabus and mark scheme, referring to your Team Leader as appropriate
- marks are awarded when candidates clearly demonstrate what they know and can do
- marks are not deducted for errors
- marks are not deducted for omissions
- answers should only be judged on the quality of spelling, punctuation and grammar when these features are specifically assessed by the question as indicated by the mark scheme. The meaning, however, should be unambiguous.

GENERIC MARKING PRINCIPLE 4:

Rules must be applied consistently e.g. in situations where candidates have not followed instructions or in the application of generic level descriptors.

© UCLES 2019

GENERIC MARKING PRINCIPLE 5: Marks should be awarded using the full range of marks defined in the mark scheme for the question (however; the use of the full mark range may be limited according to the quality of the candidate responses seen).
GENERIC MARKING PRINCIPLE 6: Marks awarded are based solely on the requirements as defined in the mark scheme. Marks should not be awarded with grade thresholds or grade descriptors in mind.

© UCLES 2019

Question	Answer	Marks
1(a)	P = Voltmeter Q = Salt bridge Conc = 1(.00) mol dm^{-3}	**1**
1(b)(i)	100 / 1000 · 0.200 = 0.020 moles Volume of 0.500 mol dm^{-3} = 0.020/0.500 = 40(.0) cm^3	**1**
1(b)(ii)	**M1** Transfer 40.0 cm^3 of 0.500 mol dm^{-3} solution into a (100.0 cm^3) volumetric flask using a burette	**1**
	M2 Make up to the **mark / line** with **distilled** water. (Stopper and shake).	**1**

© UCLES 2019

Question	Answer	Marks
1(b)(iii)		**2**

$[Mn^{Z+}]$ / mol dm^{-3}	Cell Potential / V	Log $[Mn^{Z+}]$	Electrode potential (manganese half-cell), E / V
$5.0 \cdot 10^{-1}$	+1.529	–0.30	–1.189
$2.0 \cdot 10^{-1}$	+1.541	–0.70	–1.201
$1.0 \cdot 10^{-1}$	+1.550	–1.00	–1.210
$7.5 \cdot 10^{-2}$	+1.553	–1.12	–1.213
$2.5 \cdot 10^{-2}$	+1.567	–1.60	–1.227
$8.0 \cdot 10^{-3}$	+1.582	–2.10	–1.242
$6.0 \cdot 10^{-3}$	+1.590	–2.22	–1.250
$4.0 \cdot 10^{-3}$	+1.591	–2.40	–1.251
$3.0 \cdot 10^{-3}$	+1.594	–2.52	–1.254
$5.0 \cdot 10^{-4}$	+1.617	–3.30	–1.277

1 mark for each correct column

Question	Answer	Marks
1(c)	**M1** Correctly plotted data points	**1**
	M2 Accurate line of best fit 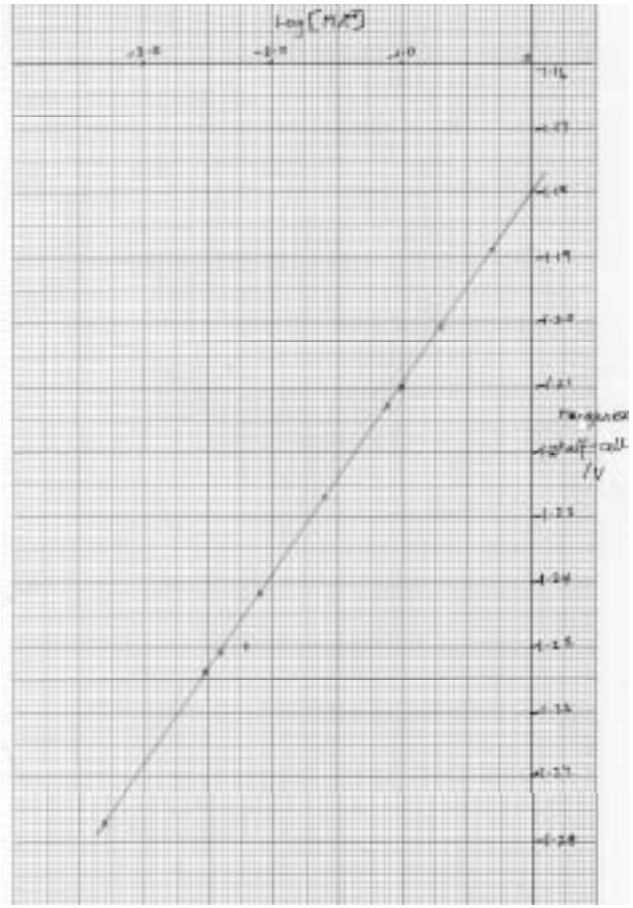	**1**
1(d)(i)	Ring around point at –2.22, –1.250	**1**
1(d)(ii)	(The point is below the line) The solution is more dilute than it should be.	**1**

Question	Answer	Marks
1(e)	–1.18v	**1**
1(f)(i)	**M1** Points read from the graph	**1**
	M2 Gradient calculated correctly	**1**
1(f)(ii)	**M1** Gradient = 0.059 / z z = 0.059 / gradient 0.059 / 0.0293 = 2.01	**1**
	M2 Mn^{2+}	**1**
1(g)	The equilibrium between the metal and its ions moves to produce more Mn^{2+} or electrons / more reaction $Mn \rightarrow Mn^{2+} + 2e^-$ / the tendency to ionise / oxidise increases.	**1**

© UCLES 2019

Question	Answer	Marks
2(a)(i)	**M1** M_r propan-2-ol is 36 + 16 + 8 = 60 **and** n propan-2-ol = 5 / 60 = 0.0833(3)	**1**
	M2 n $K_2Cr_2O_7$ = 0.0833 ÷ 3 = 0.0278 M_r $K_2Cr_2O_7$ = 78.2 + 104 + 112 = 294.2 Mass = 294.2 · 0.0278 = 8.16953333 = 8.17 g	**1**
2(a)(ii)	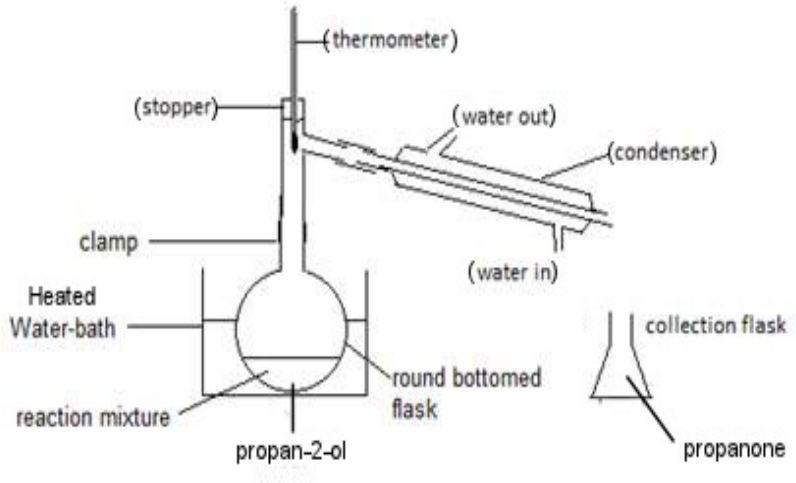 Marks awarded for correctly labelled diagram showing the following: Thermometer in the correct position Condenser showing coolant Sealed apparatus around the round bottomed flask and thermometer. No seal around collection flask. **Three points shown, award 2 marks** **Two points shown, award 1 mark** **Propan-2-ol and propanone in correct locations, award 1 mark**	**3**
2(a)(iii)	Propan-2-ol is flammable **AND** should not be heated directly / keep away from a naked flame / Bunsen burner	**1**

Question	Answer	Marks
2(a)(iv)	Reagent: sodium carbonate / an alkali	**1**
	Explanation: carbonate **added** until no further effervescence / alkali **added** until indicator shows neutral / not acidic OR use an indicator to test when neutral / for a base/metal – (added until) some solid remains	**1**
2(b)(i)	It is faster / precipitate is drier (a comparison is required)	**1**
2(b)(ii)	Return it to the oven for a further period of time / Repeat drying. Reweigh. **AND** Continue with this process until the mass is constant	**1**
2(b)(iii)	**M1** Mass of propanone = 5 · 0.789 = 3.945 g only	**1**
	M2 Mr Propanone = 58	**1**
	M3 Moles propanone = 3.945 / 58 = 0.0680 Expected yield = 0.0680 · 238 = 16.184 g (16.18810345) % yield = 11.84 / 16.20 · 100 = 73 % (73.14013058)	**1**
2(b)(iv)	The reaction does not go to completion / is reversible / is an equilibrium reaction	**1**

© UCLES 2019